I-Cherng

Born for Innovative Coils

BAT/BDT *series* condenser

For Medium Scale System application

中型立式冷凝器系列

BAT/BDT Series--The Bavaria Zen style color, ultimate industrial aesthetics!

The Most Beautiful, Compact, Valuable Condenser for medium scale system!

BAT/BDT 系列--巴伐利亞禪風色彩，極致工業美學!

最美、最緊緻、最高價值的中型冷凍系統散熱器！

Exterior

The Zen style color concept for this series is from a beautiful Bavaria building in Germany. Brilliant diamond shape arrangement is not only for good out looking, it also provides better air flow and easy to maintain. All models are for outdoor installation. Slim and less space requirement make it easy to install. Foundation only needs less than 4m^2.

外觀

來自德國巴伐利亞建築物簡約禪風的色彩美學發想，成就此系列沉穩不凡的外觀。耀眼鑽石型安排不僅是為了工業美學，同時兼具最佳氣流分配與容易保養的功能。專為小空間的中型冷凍系統所設計。全機種適合安裝於戶外。安裝空間需求小，容易安裝。安裝地板面積少於 4m^2。

Interior

V shape coils are well arranged in a compact cabinet. All models use inner grooved tube for better heat transfer performance. Equipped with high performance fan set provides the best air flow. BDT-models come with compressor housing, easy to install high pressure side components.

內在

V 型配置的交換器緊湊地安裝於單一箱體內。全系列使用內螺紋管提升熱傳效率。高效能風車提供最佳氣流量。BDT 機種並具有壓縮機房便於安裝高壓側所有零件。

Functional

All units are carefully designed for better cooling efficiency. Optimum refrigerant distribution design carries out the best efficiency in small dimension. With low refrigerant capacity cuts down refrigerant cost expense and shortens the heavy running current time at each start up.

功能

全系列機種經過詳細設計，以發揮最佳的冷凝效果。優化的冷媒分配設計實現小空間大效能的理想。低冷媒容量設計減少冷媒費用支出並縮短每次啟動運轉大電流的時間。

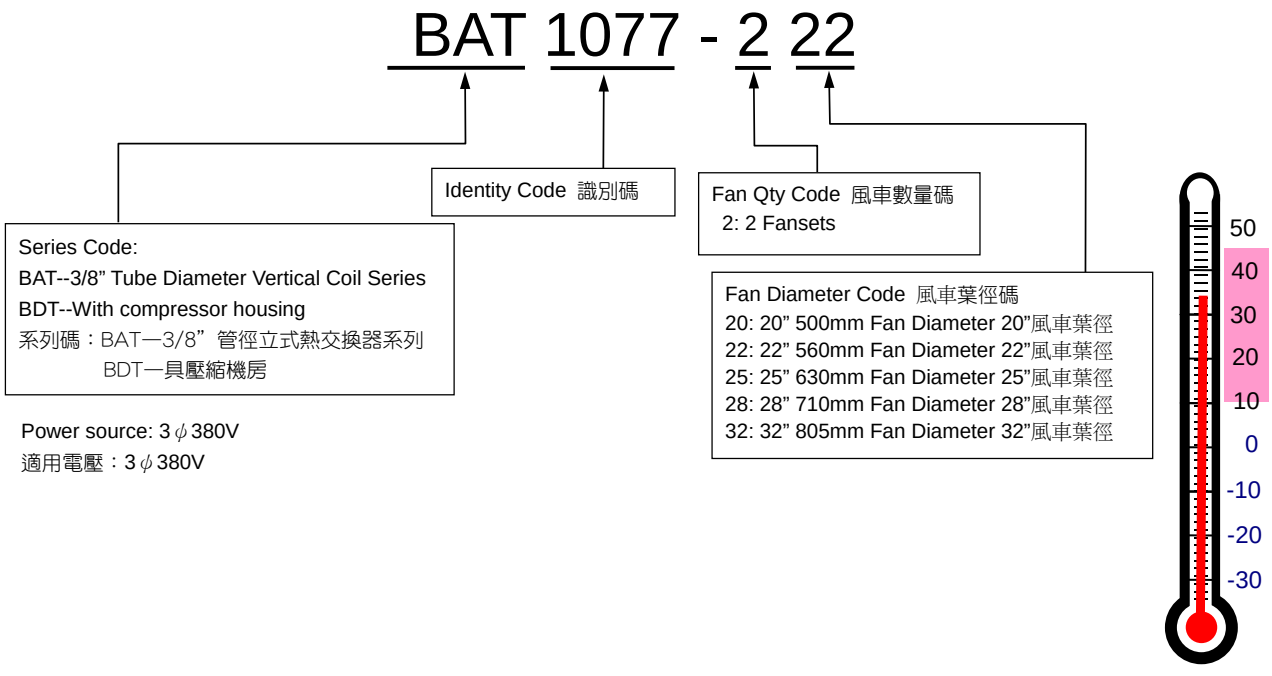

Power source: 3φ380V
適用電壓：3φ380V

50Hz

Technical Data

Fin Spacing=2.54mm
鰭片間距 =2.54mm

MODEL 型號	Capacity 能力 kW TD=15°C	Inner Volume 管內容積 litter	Heat Transfer Area 傳熱面積 m^2	Fan Set 風車		
				Qty. 數量	Dia.葉徑 mm	Airflow 風量 cmh
BAT0356-220	24.66	7.3	44.3	2	500	9530
BAT0535-220	30.44	10.9	66.5	2	500	9135
BAT0713-220	33.57	14.5	88.7	2	500	8740
BAT0808-222	46.70	16.5	100	2	560	14177
BAT1077-222	52.61	22.0	134	2	560	13804
BAT1077-225	64.18	22.0	134	2	630	19698
BAT1436-225	72.22	29.3	179	2	630	19101
BAT1426-228	85.99	29.1	177	2	710	26334
BAT1901-228	97.00	38.8	236	2	710	25808
BAT2139-232	126.30	43.6	266	2	805	38317
BAT2851-232	142.20	56.7	354	2	805	37527

MODEL 型號	Capacity 能力 kW TD=15°C	Inner Volume 管內容積 litter	Heat Transfer Area 傳熱面積 m^2	Fan Set 風車		
				Qty. 數量	Dia.葉徑 mm	Airflow 風量 cmh
BDT0356-220	24.66	7.3	44.3	2	500	9530
BDT0535-220	30.44	10.9	66.5	2	500	9135
BDT0713-220	33.57	14.5	88.7	2	500	8740
BDT0808-222	46.70	16.5	100	2	560	14177
BDT1077-222	52.61	22.0	134	2	560	13804
BDT1077-225	64.18	22.0	134	2	630	19698
BDT1436-225	72.22	29.3	179	2	630	19101
BDT1426-228	85.99	29.1	177	2	710	26334
BDT1901-228	97.00	38.8	236	2	710	25808

Dimension

MODEL 型號	Connection 冷媒接管		Dimension 尺寸 mm			Anchor 固定位置 mm	
	In 入	Out 出	L	H	B	L1	B1
BAT0356-220	7/8"	3/4"	1625	615	800	1390	750
BAT0535-220	7/8"	3/4"	1625	615	800	1390	750
BAT0713-220	7/8"	3/4"	1625	615	800	1390	750
BAT0808-222	1 1/8"	7/8"	1975	705	880	1740	830
BAT1077-222	1 1/8"	7/8"	1975	705	880	1740	830
BAT1077-225	1 3/8"	1 1/8"	1975	890	1050	1740	830
BAT1436-225	1 3/8"	1 1/8"	1975	890	1050	1740	830
BAT1426-228	1 5/8"	1 3/8"	2275	985	1140	2040	1105
BAT1901-228	1 5/8"	1 3/8"	2275	985	1140	2040	1105
BAT2139-232	1 5/8"	1 3/8"	3025	1090	1155	2740	1105
BAT2851-232	1 5/8"	1 3/8"	3025	1090	1155	2740	1105

MODEL 型號	Connection 冷媒接管		Dimension 尺寸 mm				Anchor 固定位置 mm	
	In 入	Out 出	L	H	H1	B	L1	B1
BDT0356-220	7/8"	3/4"	1625	1604	827	800	1545	730
BDT0535-220	7/8"	3/4"	1625	1604	827	800	1545	730
BDT0713-220	7/8"	3/4"	1625	1604	827	800	1545	730
BDT0808-222	1 1/8"	7/8"	1975	1693	827	1050	1895	810
BDT1077-222	1 1/8"	7/8"	1975	1693	827	1050	1895	810
BDT1077-225	1 3/8"	1 1/8"	1975	1878	827	1050	1895	980
BDT1436-225	1 3/8"	1 1/8"	1975	1878	827	1050	1895	980
BDT1426-228	1 5/8"	1 3/8"	2275	1974	827	1140	2245	1085
BDT1901-228	1 5/8"	1 3/8"	2275	1974	827	1140	2245	1085

Dimension

BAT Series

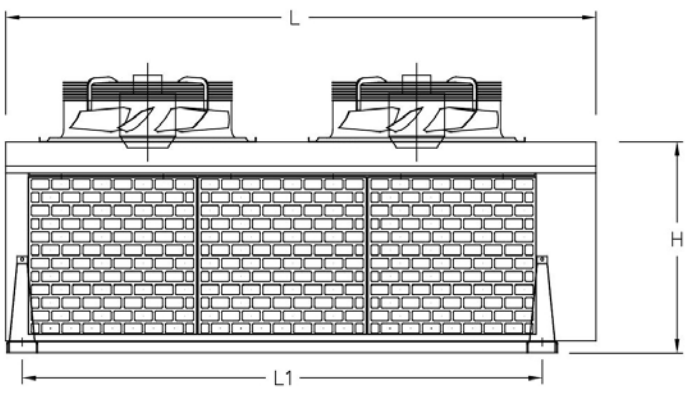

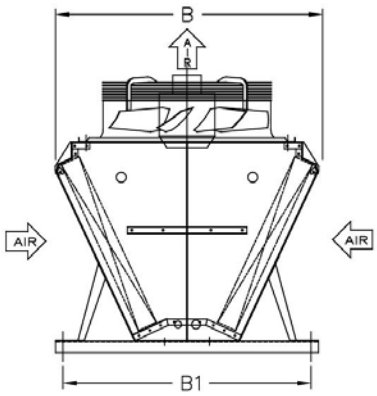

BDT Series

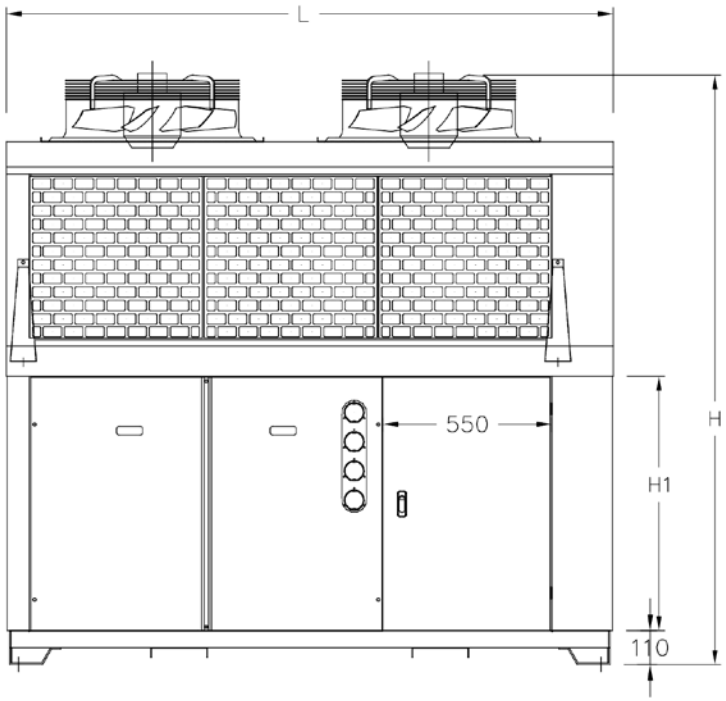

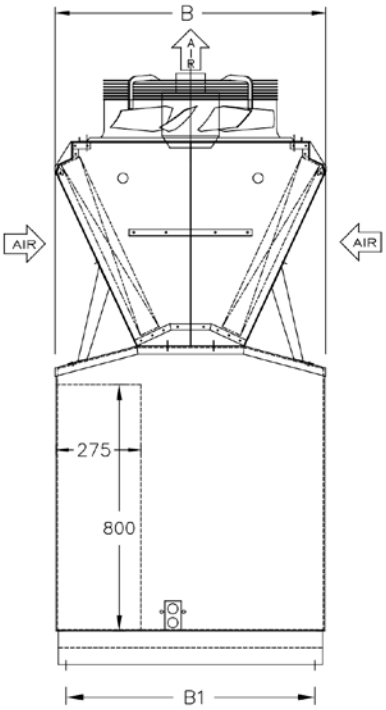

Capacity Selection
能力選擇

All the capacity data listed on the catalog is based on R404A and the temperature difference between inlet air temperature of coil and condensing temperature. The condition is listed on Table 1.

For the condition differs from above should be modified by following equation.

$Q_r=Q_c \times f_1 \times f_2$

Q_r: Rating capacity of condenser
Q_c: Capacity of condenser listed on catalog
f_1: Correction factor for different temp. difference
$f_1=\triangle T/15$
△ T: temp. difference between inlet air and condensing temp.
f_2 : Correction factor for refrigerant on Table 2

If installed above sea level more than 500m, please contact with us.

We also provide the anti corrosion coils (EnergyGuard® technology), if select the EnergyGuard coating, the capacity should time 0.975 correction factor again.

本型錄所有的能力資料是依據使用R404A以及表1 所列的熱交換器進口空氣溫度與冷凝溫度溫度差所計算。

當條件與表 1 所列不同時，請依照下式進行能力修正：

$Q_r=Q_c \times f_1 \times f_2$

Q_r: 冷凝器額定能力
Q_c: 冷凝器型錄能力
f_1: 不同溫度差修正係數
$f_1=\triangle T/15$
△T: 進口空氣溫度與冷凝溫度溫度差
f_2 : 表 2 不同冷媒修正係數

如果安裝在海拔高於 500 公尺以上的場所時，請與我們聯繫。
我們也提供防蝕處理的盤管(衛能防蝕技術®)，如果選購衛能防蝕處理，則能力必須要再乘上0.975。

Table 1 Catalog capacity conditions
表 1 型錄性能條件

Item 項目	Condition 條件
Refrigerant 冷媒	R404A
Temperature Difference 溫度差	15 ºC

Table 2 Correction factor f for different refrigerants
表 2 不同冷媒修正係數 f_2 值

Factor 係數	R404A/R507	R134a
f_2	1	0.93

Fan Set Performance

風車性能

Our fan set is designed for free outlet not for ducting purpose. If you have requirement for install air duct at the air outlet of condenser, please contact with us for special design.
We also provide optional fan grid to change the outlet air direction.

我們的風車設計是直接排出熱交換器，所有的表列風車能力是依據出口端無障礙物時所獲得，並不是為安裝風管所設計。如果您要於風車出口安裝風管，請與我們聯絡。
我們亦有選購導風罩，可以改變熱交換器出口的氣流方向。

Table 3 Performance table of fan set (for one set)

表 3 風車組性能表(單組)

Hz 頻率	Fan Set Model 風車型號	Fan dia. 葉徑 mm	Input 入力 W	Voltage 電壓 V	Rating Current 額定電流 A
50Hz	660JK	500	250	3 ϕ 380V	0.7
	660MB	560	360	3 ϕ 380V	0.9
	660NF	630	1010	3 ϕ 380V	1.9
	660PK	710	1200	3 ϕ 380V	2.4
	660RA	805	1500	3 ϕ 380V	3.3

Dimension of Fan set

風車組尺寸

660JK

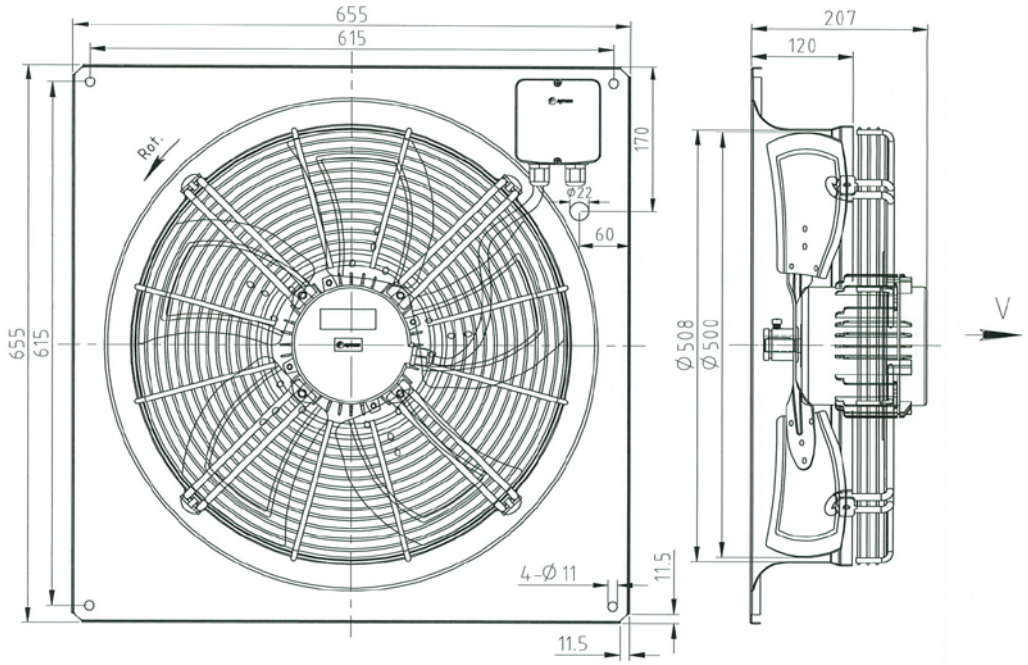

660MB

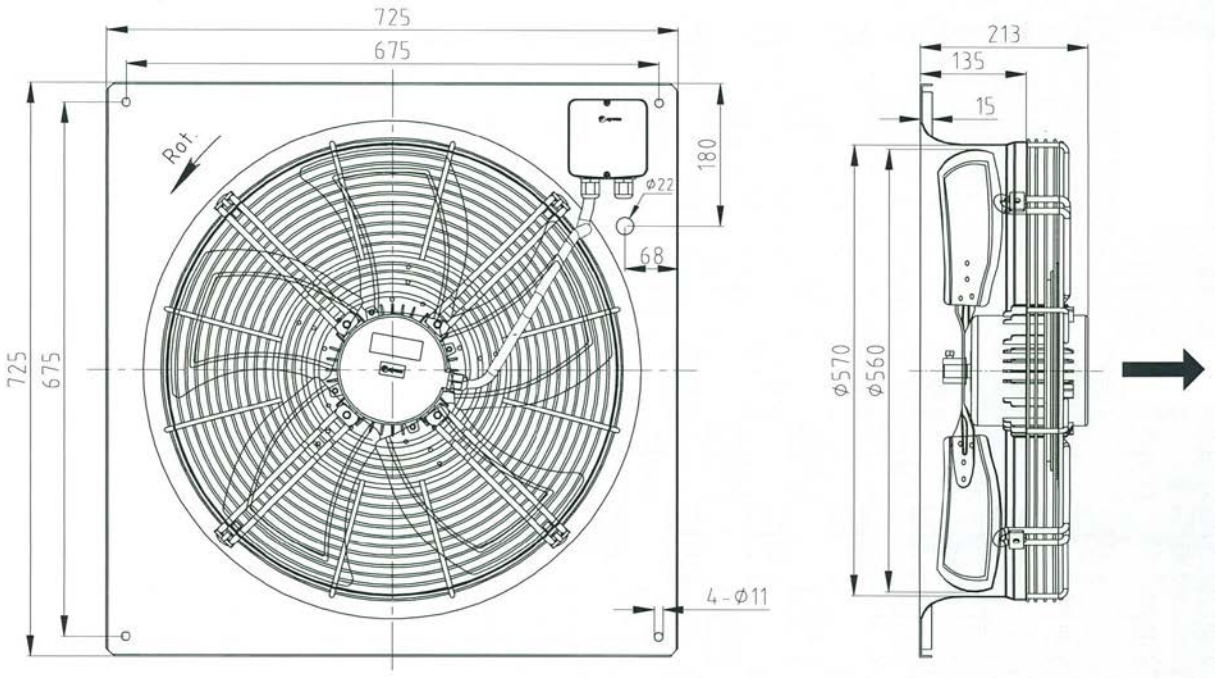

660NF

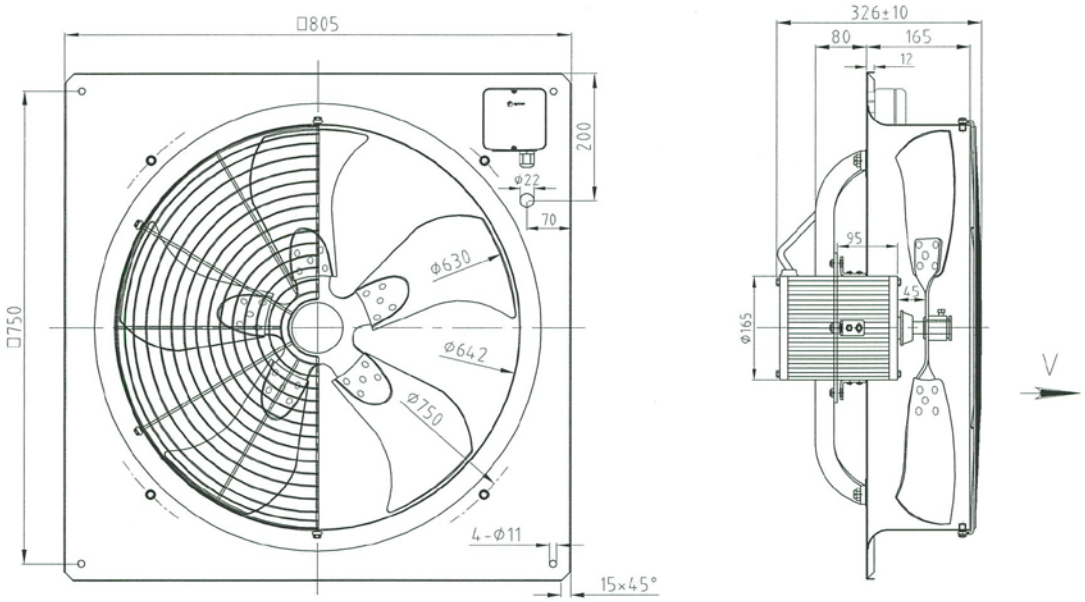
□805
200
□750
ø22
70
ø630
ø642
ø750
4-ø11
15x45°
326±10
80
165
12
95
45
ø165
V

660PK

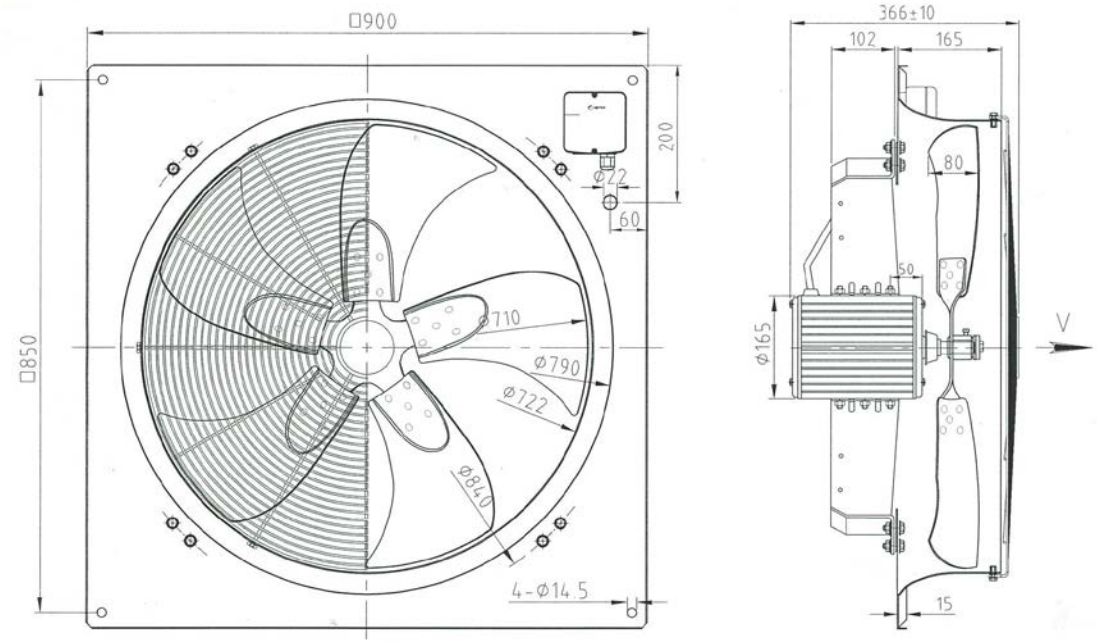
□900
200
□850
ø22
60
ø710
ø790
ø722
ø840
4-ø14.5
366±10
102
165
80
50
ø165
15
V

660RA

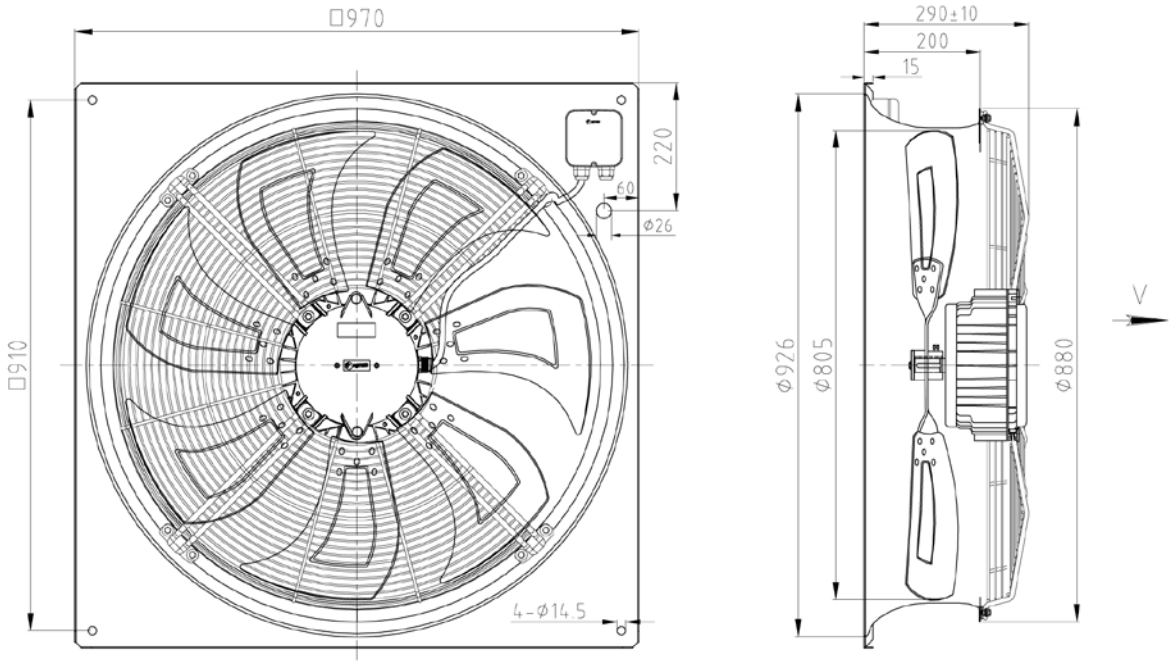

Parts Specification of our unit coil

熱交換器部品規格

Parts 部品	Specification 規格
Fins 鰭片	Aluminum Alloy 8006 鋁合金 8006
Tubes 管	Copper C1220T 3/8” 紫銅管 C1220T 3/8”
Casing 箱體	Painted Galvanized Steel G3302 SG-CC 烤漆鍍鋅鋼板 G3302 SG-CC Stainless Steel SUS304(Optional) 不銹鋼板 SUS304（選購）
Fan motor 風車馬達	IP 23
Anti Corrosion(Optional) 鰭片防蝕（選購）	EnergyGuard® 衛能防蝕技術

2018.5.20. Ver.02 Subject to change without notice! 資料變更恕不另行通知！

I-Cherng Refrigeration Industrial Co., Ltd.
一丞冷凍工業股份有限公司
Heat Exchanger Taiwan 熱交換器 台灣製造
No.12 Chu Kuang 1st St., Daliao Dist.,
Kaohsiung City, 83164, Taiwan
台灣高雄市大寮區莒光一街 12 號
Tel:07-7873666 Fax:07-7872999
Website: www.icherng.com.tw
Email: icherng.com@msa.hinet.net

Heat Exchanger Taiwan

一丞