I-Cherng

Born for Innovative Coils

DVC series condenser

for Commercial application

商業應用冷凝器系列

DVC condenser

DVC Series--The most quiet and beautiful Italian style commercial condenser!

Space Saving, Refrigerant Saving, Energy Saving and Money Saving!

DVC 系列--最安靜與最美的義式風格商用冷凝器!

最小安裝空間、減少冷媒使用、節約能源與最具經濟效益！

Exterior

This series condenser is designed for small and medium scale commercial refrigeration system. Trapezoid-shape coil design maximizes air intake area in small size. Special geometry shape minimizes the installation space and could place two condensers side by side in a short distance. All casings are made of painted galvanized steel and aluminum alloy for weatherproof purpose. Splendid outlook design is not only for the aesthetics but also convenient for maintenance.

外觀

此系列機種是專為中小型商用型冷凍冷藏系統所設計。特殊幾何形狀的熱交換器設計減少對安裝空間需求，縮小兩組冷凝器間的距離。全系列為鍍鋅鋼板與鋁合金烤漆外箱，可以直接安裝於戶外。亮麗外型設計不僅只是美學的考量，同時提供極佳的維修便利性。

Interior

Small internal tube volume design decreases the usage of refrigerant. Trapezoid shape and using inner grooved tubes coil achieves the large heat transfer area in small space; this also reduces the velocity of air flow and the noise. Using fin material and process from Europe, recreate the Italian style heat exchanger in Taiwan.

內在

低管內容積設計減少冷媒使用量。梯型與內螺紋管熱交換器設計在最小的空間實現最大的傳熱面積；此一設計同時降低通過熱交換器的空氣流速與噪音。使用來自歐洲的 8006 鰭片材料與製程，於台灣重現義式風格的熱交換器。

Functional

All units are carefully designed for better cooling efficiency with low noise. Discontinuous fin type breaks heat effect between rows avoids the heat interference. Thus enhance the heat transfer performance. With low air flow velocity, dust is not easy to accumulate on fins. So the maintenance period could be extended.

功能

全系列機種經過詳細設計，以發揮最佳的冷凝效果與最低的運轉噪音。

鰭片斷熱設計避免排與排之間的熱影響以獲得最佳的熱傳。

由於低風速設計，鰭片不易累積灰塵時，因此保養週期可以延長。

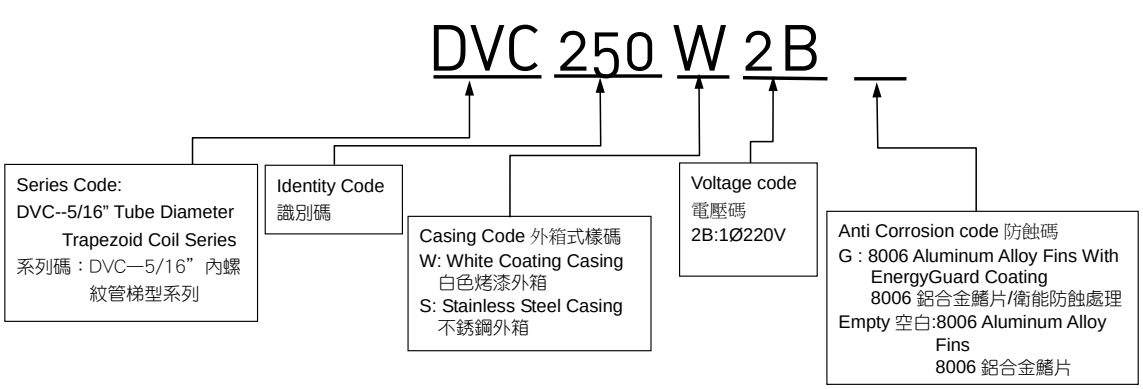

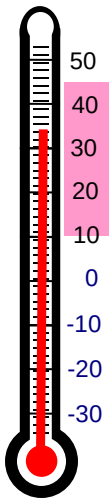

60Hz

Technical Data

Fin Spacing=2.12mm
鰭片間距 =2.12mm

MODEL 型號	Capacity 能力 kW TD=15°C	Heat Transfer Area 傳熱面積 m²	Fan Set 風車			Connection 冷媒接管		Dimension 尺寸 mm			Suspension 吊掛位置 mm	
			Qty. 數量	Dia. 葉徑 mm	Airflow 風量 cmh	In 入	Out 出	L	H	B	L1	B1
DVC□100	2.16	4.07	1	305	1560	5/16"	5/16"	551	412	306	426	370
DVC□150	2.82	6.00	1	305	1510	5/16"	5/16"	551	412	306	426	370
DVC□200	3.47	7.92	1	305	1459	1/2"	1/2"	551	412	306	426	370
DVC□250	4.56	13.45	1	305	1637	1/2"	1/2"	763	412	391	639	455
DVC□300	5.40	12.44	1	450	3239	5/8"	1/2"	763	514	426	639	455
DVC□350	7.44	16.81	1	450	3185	5/8"	1/2"	763	514	426	639	455
DVC□400	8.63	21.51	1	450	3134	5/8"	1/2"	763	514	426	639	455
DVC□500	9.13	23.87	1	450	3287	3/4"	5/8"	914	514	426	790	455
DVC□600	10.16	28.33	1	450	3244	3/4"	5/8"	914	514	426	790	455
DVC□700	12.56	26.60	2	450	6532	3/4"	5/8"	1368	616	426	1244	455
DVC□800	14.80	32.72	2	450	6407	3/4"	5/8"	1368	616	426	1244	455
DVC□900	16.70	40.40	2	450	6270	7/8"	3/4"	1368	616	426	1244	455
DVC□1000	18.67	48.00	2	450	6133	7/8"	3/4"	1368	616	426	1244	455

Dimension

DVC□100~ DVC□250

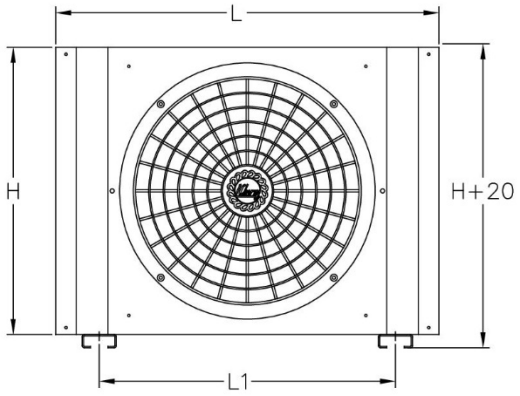

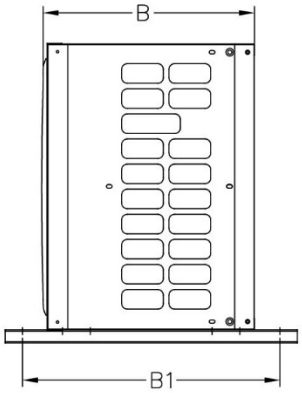

DVC□300~ DVC□600

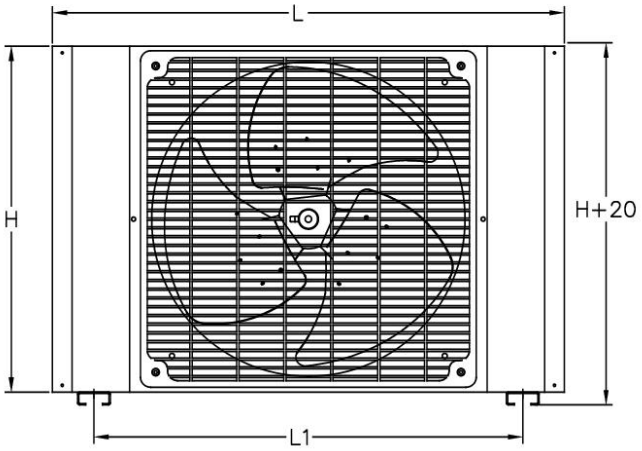

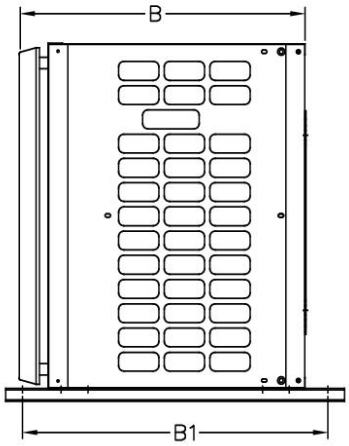

DVC□700~ DVC□1000

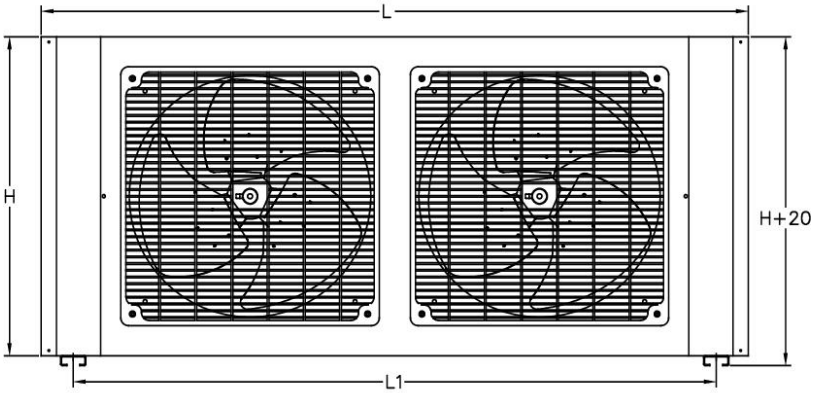

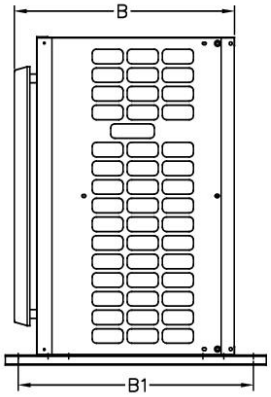

Capacity Selection
能力選擇

All the capacity data listed on the catalog is based on R404A and the temperature difference between inlet air temperature of coil and condensing temperature. The condition is listed on Table 1.

For the condition differs from above should be modified by following equation.

$Q_r = Q_c \times f_1 \times f_2$

Q_r: Rating capacity of condenser
Q_c: Capacity of condenser listed on catalog
f_1: Correction factor for different temp. difference
$f_1 = \triangle T/15$
$\triangle$ T: temp. difference between inlet air and condensing temp.
f_2 : Correction factor for refrigerant on Table 2

If installed above sea level more than 500m, please contact with us.

We also provide the anti corrosion coils (EnergyGuard® technology), if select the EnergyGuard coating, the capacity should time 0.975 correction factor again.

本型錄所有的能力資料是依據使用R404A以及表 1 所列的熱交換器進口空氣溫度與冷凝溫度溫度差所計算。

當條件與表 1 所列不同時，請依照下式進行能力修正：

$Q_r = Q_c \times f_1 \times f_2$

Q_r: 冷凝器額定能力
Q_c: 冷凝器型錄能力
f_1: 不同溫度差修正係數
$f_1 = \triangle T/15$
$\triangle$T: 進口空氣溫度與冷凝溫度溫度差
f_2 : 表 2 不同冷媒修正係數

如果安裝在海拔高於 500 公尺以上的場所時，請與我們聯繫。
我們也提供防蝕處理的盤管(衛能防蝕技術®)，如果選購衛能防蝕處理，則能力必須要再乘上 0.975。

Table 1 Catalog capacity conditions
表 1 型錄性能條件

Item 項目	Condition 條件
Refrigerant 冷媒	R404A
Temperature Difference 溫度差	15 ºC

Table 2 Correction factor f for different refrigerants
表 2 不同冷媒修正係數 f_2 值

Factor 係數	R404A/R507	R134a
f_2	1	0.93

Fan Set Performance
風車性能

Our fan set is designed for free outlet not for ducting purpose. If you have requirement for install air duct at the air outlet of condenser, please contact with us for special design.
We also provide optional fan grid to change the outlet air direction.

我們的風車設計是直接排出熱交換器，所有的表列風車能力是依據出口端無障礙物時所獲得，並不是為安裝風管所設計。如果您要於風車出口安裝風管，請與我們聯絡。
我們亦有選購導風罩，可以改變熱交換器出口的氣流方向。

Table 3 Performance table of fan set (for one set)

表 3 風車組性能表(單組)

Hz 頻率	Fan Set Model 風車型號	Fan dia. 葉徑 mm	Input 入力 W	Voltage 電壓 V	Rating Current 額定電流 A
60Hz	660CP	305	60	1ø220V	0.27
	660HH	450	138	1ø220V	0.63

Dimension of Fan set
風車組尺寸

660CP

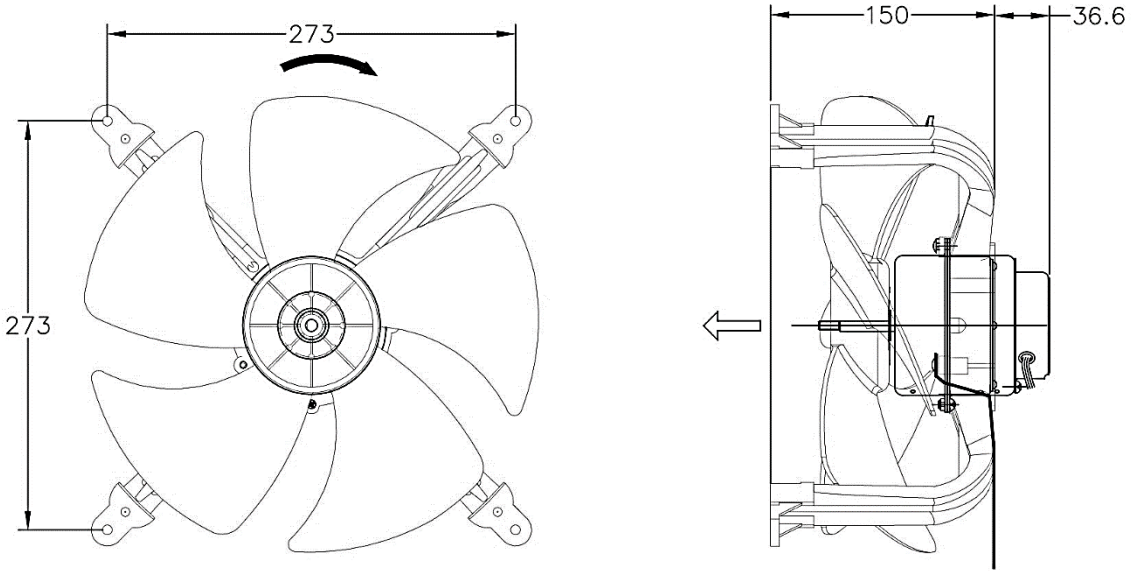

660HH

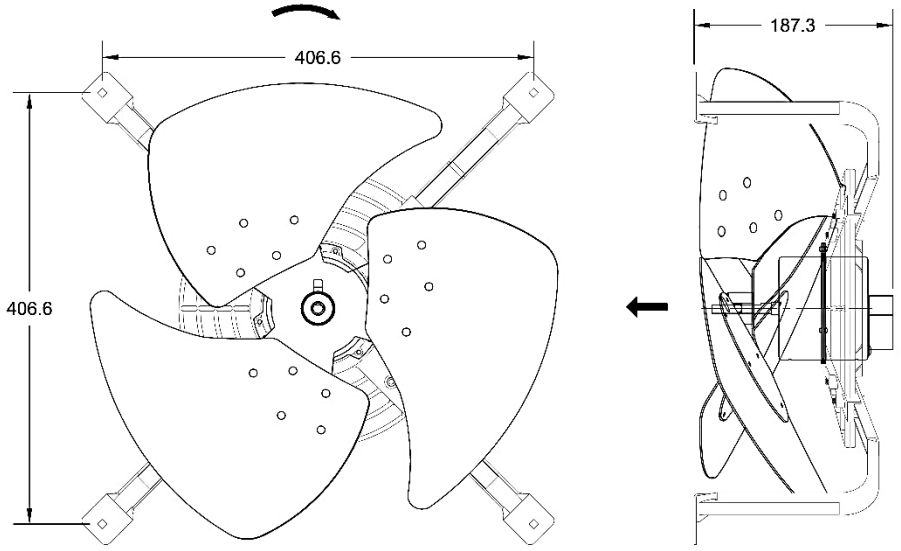

Optional Air Guide
選購導風罩

623Y12A (White Color Coating Aluminum Alloy Type 白色鋁合金烤漆型)
623Y12S (Stainless Steel Type 不銹鋼型)
(DVC100□□~DVC250□□)

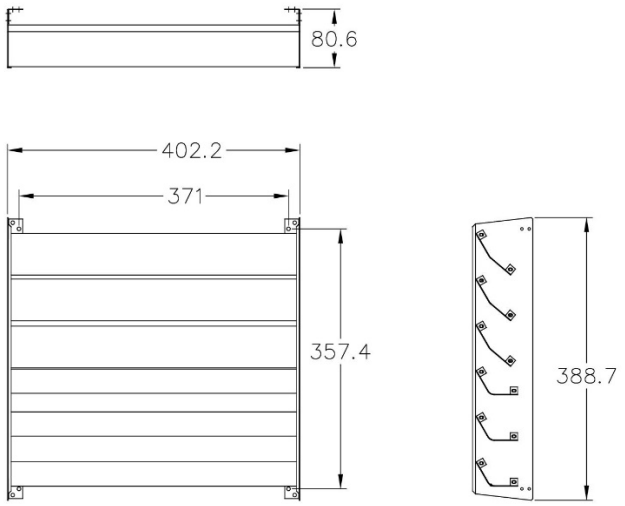

623Y18A (White Color Coating Aluminum Alloy Type 白色鋁合金烤漆型)
623Y18S (Stainless Steel Type 不銹鋼型)
(DVC300□□~DVC1000□□)

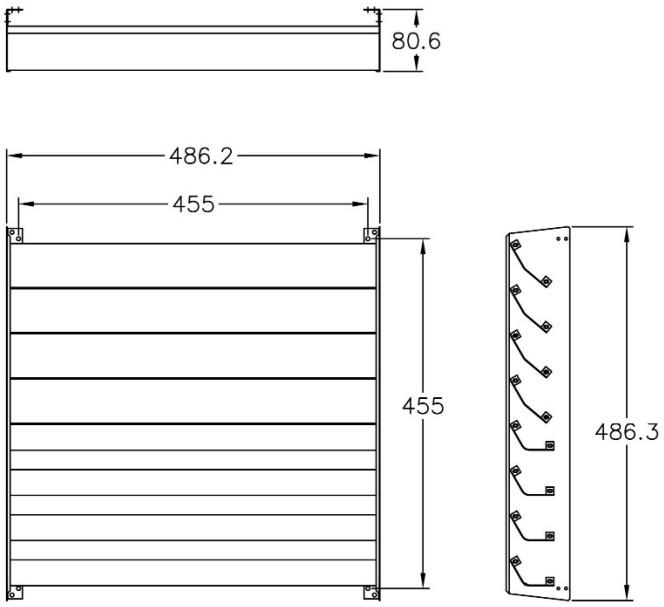

Optional Water Spray System
選購灑水系統

Parts Number 訂購料號	Corresponding Product Model Number 對應產品型號
3DVCW102	DVC100~200
3DVCW304	DVC250~400
3DVCW506	DVC500~600
3DVCW710	DVC700~1000

This optional system includes a water pipe set and a drain pan set.
此選購系統包含一組灑水管套件與一組排水盤套件。

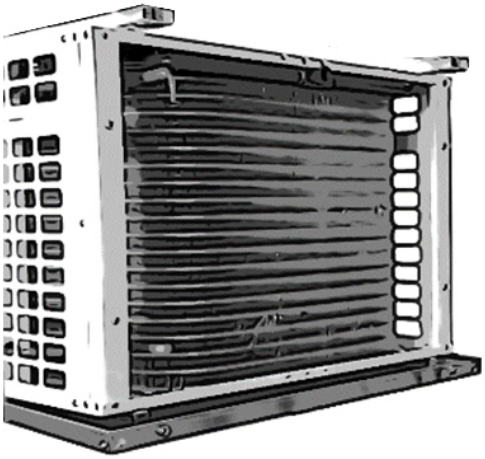

Parts Specification of our unit coil

熱交換器部品規格

Parts 部品	Specification 規格
Fins 鰭片	Aluminum Alloy 8006 鋁合金 8006
Tubes 管	Copper C1220T 5/16” Inner Grooved tube 紫銅管 C1220T 5/16” 內螺紋管
Casing 箱體	Painted Galvanized Steel G3302 SG-CC + Painted Aluminum Alloy A5052P 烤漆鍍鋅鋼板 G3302 SG-CC+烤漆鋁合金板 A5052P Stainless Steel SUS304(G model) 不銹鋼板 SUS304（G 型式）
Fan motor 風車馬達	IP 23
Anti Corrosion(G model) 鰭片防蝕（G 型式）	EnergyGuard® 衛能防蝕技術

2017.Dec. Subject to change without notice!　資料變更恕不另行通知！

I-Cherng Refrigeration Industrial Co., Ltd.
一丞冷凍工業股份有限公司
Heat Exchanger　Taiwan 熱交換器 台灣製造
No.12 Chu Kuang 1st St., Daliao Dist.,
Kaohsiung City, 83164, Taiwan
台灣高雄市大寮區莒光一街 12 號
Tel:07-7873666 Fax:07-7872999
Website: www.icherng.com.tw
Email: icherng.com@msa.hinet.net

Heat Exchanger Taiwan

一丞