I-Cherng

Born for Innovative Coils

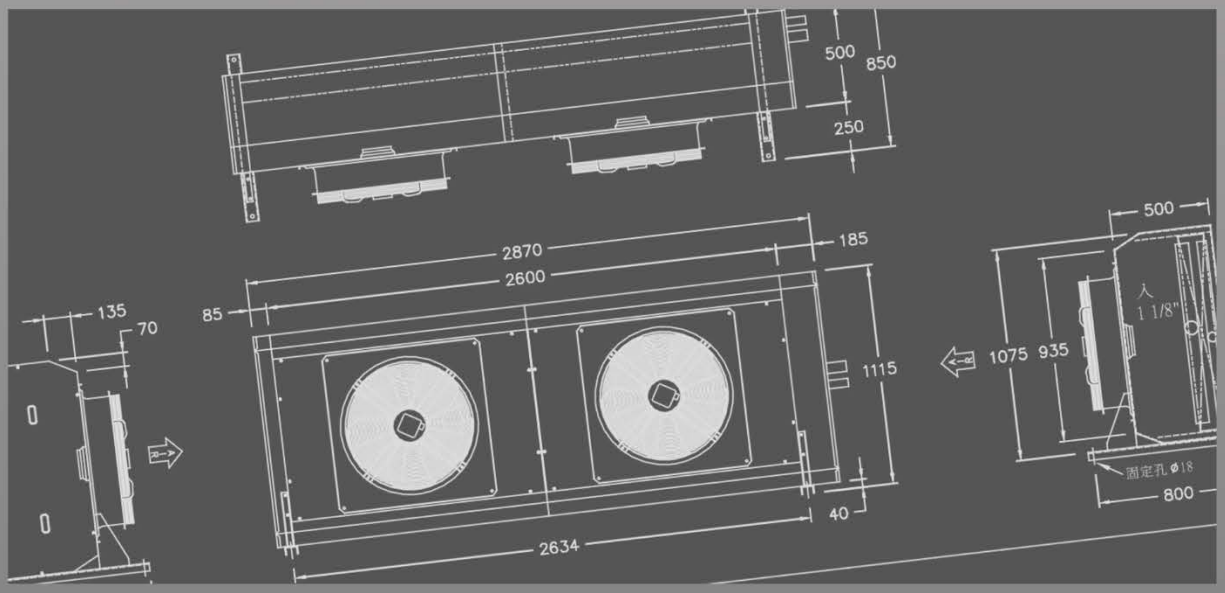

VBM/HM condenser

For large Scale System application

大型立式冷凝器系列

VBM/HM Series--The best choice condenser for large scale refrigeration system!

High Efficiency, Economical and Maintenance Easy!

VBM/HM 系列--大型冷凍系統冷凝器的最佳選擇!

高效率、經濟與易於維修！

Exterior

This series is designed for large scale refrigeration system. All models are for outdoor or roof top installation. Suitable for limited space.

外觀

此系列機種是專為大型冷凍系統所設計。全機種適合安裝於戶外或屋頂。適合土地面積小的場所。

Interior

Horizontal coil with gravity effect design and inner grooved tubes maximize the performance in minimum space. Equipped with high performance inside fan set provides the best air flow. Patented endplate design provides the best protection to copper tubes, avoids tube damage during transportation and operation. All fins in coils are 8006 aluminum alloy.

內在

重力式水平熱交換器設計與內螺紋管得以實現小空間最大能力化。內置式高效能風車提供最佳氣流量。專利端板設計提供最安全的銅管防護，避免運輸或運轉震動損傷。

全系列盤管鰭片採用 8006 鋁合金。

Functional

All units are carefully designed for better cooling efficiency. With optional inverter makes the optimum condensing temperature control and lowers the operating noise during night hours.

功能

全系列機種經過詳細設計，發揮最佳的冷凝效果。另有選購變頻器，可進行冷凝溫度控制並降低夜間運轉噪音。

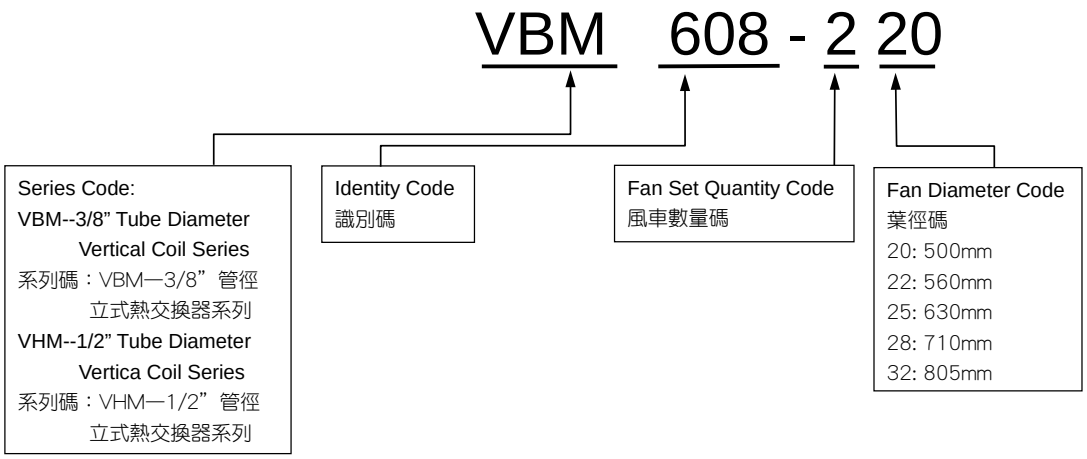

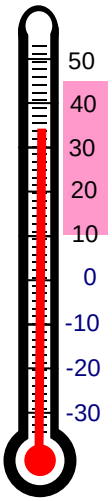

VBM/HM condenser

50Hz

VBM Technical Data

Fin Spacing=2.54mm
鰭片間距 =2.54mm

MODEL 型號	Capacity 能力 kW	Heat Transfer Area 傳熱面積	Internal Volume 管內容積	Fan Set 風車		
	TD=15 °C	m^2	L	Qty. 數量	Dia.葉徑 mm	Airflow 風量 cmh
VBM228-120	13.30	28.4	4.7	1	500	4424
VBM304-120	14.90	37.8	6.2	1	500	4193
VBM456-220	26.60	56.7	9.3	2	500	8849
VBM608-220	29.80	75.7	12.4	2	500	8385
VBM684-320	40.10	85.1	14	3	500	13273
VBM911-320	44.90	113.4	18.3	3	500	12578
VBM913-420	53.20	113.5	18.6	4	500	17697
VBM1217-420	59.50	151.3	24.8	4	500	16770
VBM339-122	20.30	42.1	6.9	1	560	6849
VBM451-122	23.00	56.2	9.2	1	560	6505
VBM677-222	41.30	84	13.3	2	560	13697
VBM903-222	46.10	112.3	18.4	2	560	13009
VBM1016-322	61.00	126.3	20.7	3	560	20546
VBM1353-322	69.20	168.5	27.6	3	560	19514
VBM1355-422	82.10	168.5	27.6	4	560	27395
VBM1806-422	92.30	224.6	36.9	4	560	26019
VBM495-125	29.20	61.6	10.1	1	630	9738
VBM660-125	33.50	82.1	13.5	1	630	9510
VBM990-225	58.80	123	20.2	2	630	19477
VBM1320-225	67.50	163.9	26.3	2	630	19020
VBM1485-325	88.20	184.7	30.3	3	630	29215
VBM1980-325	101.20	246.3	40.4	3	630	28530

50Hz

VHM Technical Data

Fin Spacing=2.54mm
鰭片間距 =2.54mm

MODEL 型號	Capacity 能力 kW TD=15 °C	Heat Transfer Area 傳熱面積 m^2	Internal Volume 管內容積 m^2	Fan Set 風車		
				Qty. 數量	Dia.葉徑 mm	Airflow 風量 cmh
VHM475-125	31.70	95.6	12.4	1	630	9968
VHM429-125	34.90	119.5	15.4	1	630	9734
VHM554-125	37.40	143.4	18.5	1	630	9547
VHM686-225	64.10	191	24.1	2	630	19937
VHM858-225	70.50	238.6	29.7	2	630	19469
VHM1029-225	75.40	286.8	37.1	2	630	19094
VHM1031-325	96.10	286.8	37.1	3	630	29905
VHM1287-325	105.60	358.5	46.3	3	630	29203
VHM1545-325	113.10	430	55.6	3	630	28642
VHM1373-425	128.90	382	49.4	4	630	39874
VHM1716-425	141.80	478	61.8	4	630	38938
VHM2059-425	151.00	573.6	74.1	4	630	38189
VHM475-128	43.70	132.4	17.1	1	710	13608
VHM594-128	47.70	165.17	21.4	1	710	13025
VHM713-128	50.50	198.6	25.7	1	710	12700
VHM950-228	87.50	264.6	34.2	2	710	27216
VHM1188-228	94.70	303.3	41.1	2	710	26050
VHM1426-328	101.30	397.1	51.3	2	710	25402
VHM1426-328	132.50	397.1	51.3	3	710	40824
VHM1782-328	143.60	496.4	64.2	3	710	39074
VHM2139-328	152.00	595.7	77	3	710	38102
VHM634-132	62.20	176.5	22.8	1	805	19786
VHM792-132	67.60	220.6	28.5	1	805	18922
VHM950-132	72.60	264.8	34.2	1	805	18749
VHM1267-232	124.40	353	45.6	2	805	39571
VHM1584-232	135.20	441.3	57	2	805	37843
VHM1901-232	145.30	529.5	68.4	2	805	37498
VHM1901-332	186.90	529.5	68.4	3	805	59357
VHM2376-332	203.50	661.9	85.6	3	805	56765
HHM2851-332	219.00	794.3	102.7	3	805	56246

VBM Dimension

MODEL 型號	Connection 冷媒接管		Dimension 尺寸 mm			Anchor 固定位置 mm	
	In 入	Out 出	L	H	B	L1	B1
VBM228-120	5/8"	5/8"	990	930	850	754	800
VBM304-120	5/8"	5/8"	990	930	850	754	800
VBM456-220	3/4"	3/4"	1710	930	850	1474	800
VBM608-220	3/4"	3/4"	1710	930	850	1474	800
VBM684-320	7/8"	7/8"	2430	930	850	2194	800
VBM911-320	7/8"	7/8"	2430	930	850	2194	800
VBM913-420	1 1/8"	1 1/8"	3150	930	850	2914	800
VBM1217-420	1 1/8"	1 1/8"	3150	930	850	2914	800
VBM339-122	3/4"	3/4"	1220	1030	850	984	800
VBM451-122	7/8"	7/8"	1220	1030	850	984	800
VBM677-222	7/8"	7/8"	2170	1030	850	1934	800
VBM903-222	1 1/8"	1 1/8"	2170	1030	850	1934	800
VBM1016-322	1 1/8"	1 1/8"	3120	1030	850	2884	800
VBM1353-322	1 3/8"	1 3/8"	3120	1030	850	2884	800
VBM1355-422	1 3/8"	1 3/8"	4070	1030	850	3834	800
VBM1806-422	1 3/8"	1 3/8"	4070	1030	850	3834	800
VBM495-125	7/8"	7/8"	1520	1135	850	1284	800
VBM660-125	7/8"	7/8"	1520	1135	850	1284	800
VBM990-225	1 1/8"	1 1/8"	2770	1135	850	2534	800
VBM1320-225	1 1/8"	1 1/8"	2770	1135	850	2534	800
VBM1485-325	1 3/8"	1 3/8"	4020	1135	850	3784	800
VBM1980-325	1 3/8"	1 3/8"	4020	1135	850	3784	800

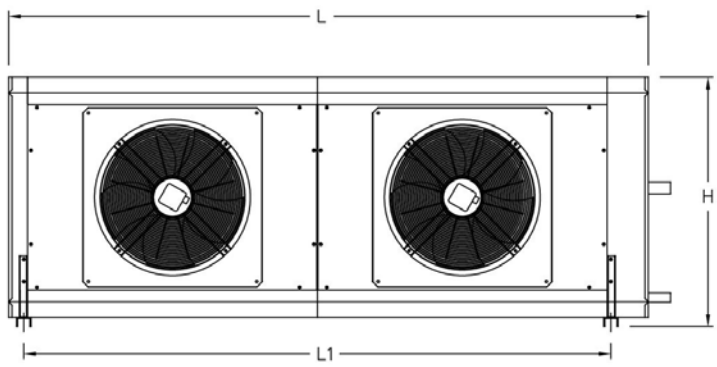

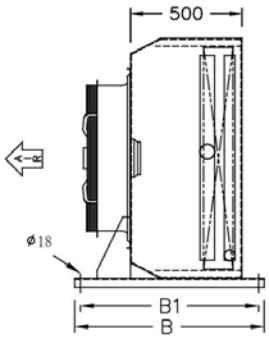

VHM Dimension

MODEL 型號	Connection 冷媒接管		Dimension 尺寸 mm			Anchor 固定位置 mm	
	In 入	Out 出	L	H	B	L1	B1
VHM475-125	7/8"	7/8"	1570	1115	850	1334	800
VHM429-125	7/8"	7/8"	1570	1115	850	1334	800
VHM554-125	7/8"	7/8"	1570	1115	850	1334	800
VHM686-225	1 1/8"	1 1/8"	2870	1115	850	2634	800
VHM858-225	1 1/8"	1 1/8"	2870	1115	850	2634	800
VHM1029-225	1 1/8"	1 1/8"	2870	1115	850	2634	800
VHM1031-325	1 3/8"	1 3/8"	4170	1115	850	3934	800
VHM1287-325	1 3/8"	1 3/8"	4170	1115	850	3934	800
VHM1545-325	1 3/8"	1 3/8"	4170	1115	850	3934	800
VHM1373-425	1 5/8"	1 5/8"	5470	1115	850	5234	800
VHM1716-425	1 5/8"	1 5/8"	5470	1115	850	5234	800
VHM2059-425	1 5/8"	1 5/8"	5470	1115	850	5234	800
VHM475-128	1 1/8"	1 1/8"	2070	1115	850	1834	800
VHM594-128	1 1/8"	1 1/8"	2070	1115	850	1834	800
VHM713-128	1 1/8"	1 1/8"	2070	1115	850	1834	800
VHM950-228	1 3/8"	1 3/8"	3870	1115	850	3634	800
VHM1188-228	1 3/8"	1 3/8"	3870	1115	850	3634	800
VHM1426-328	1 3/8"	1 3/8"	3870	1115	850	3634	800
VHM1426-328	1 5/8"	1 5/8"	5670	1115	850	5434	800
VHM1782-328	1 5/8"	1 5/8"	5670	1115	850	5434	800
VHM2139-328	1 5/8"	1 5/8"	5670	1115	850	5434	800
VHM634-132	1 3/8"	1 3/8"	2270	1315	850	2034	800
VHM792-132	1 3/8"	1 3/8"	2270	1315	850	2034	800
VHM950-132	1 3/8"	1 3/8"	2270	1315	850	2034	800
VHM1267-232	1 5/8"	1 5/8"	4270	1315	850	4034	800
VHM1584-232	1 5/8"	1 5/8"	4270	1315	850	4034	800
VHM1901-232	1 5/8"	1 5/8"	4270	1315	850	4034	800
VHM1901-332	2 1/8"	2 1/8"	6270	1315	850	6034	800
VHM2376-332	2 1/8"	2 1/8"	6270	1315	850	6034	800
HHM2851-332	2 1/8"	2 1/8"	6270	1315	850	6034	800

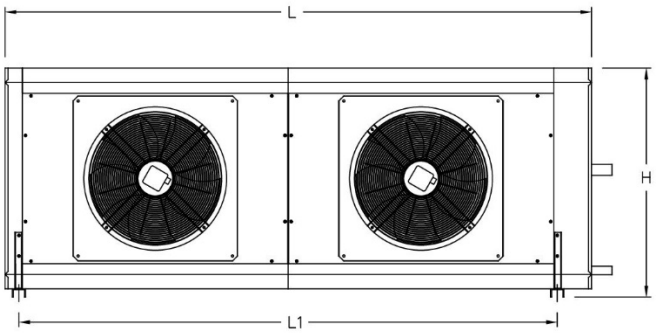

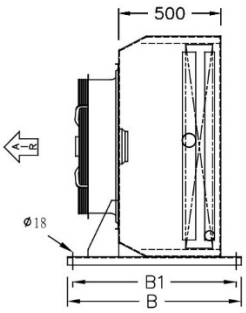

Capacity Selection
能力選擇

All the capacity data listed on the catalog is based on R404A and the temperature difference between inlet air temperature of coil and condensing temperature. The condition is listed on Table 1.

For the condition differs from above should be modified by following equation.

$Q_r = Q_c \times f_1 \times f_2$

Q_r: Rating capacity of condenser
Q_c: Capacity of condenser listed on catalog
f_1: Correction factor for different temp. difference
$f_1 = \triangle T/15$
$\triangle$ T: temp. difference between inlet air and condensing temp.
f_2 : Correction factor for refrigerant on Table 2

If installed above sea level more than 500m, please contact with us.

We also provide the anti corrosion coils (EnergyGuard® technology), if select the EnergyGuard coating, the capacity should time 0.975 correction factor again.

本型錄所有的能力資料是依據使用R404A以及表 1 所列的熱交換器進口空氣溫度與冷凝溫度溫度差所計算。

當條件與表 1 所列不同時，請依照下式進行能力修正：

$Q_r = Q_c \times f_1 \times f_2$

Q_r: 冷凝器額定能力
Q_c: 冷凝器型錄能力
f_1: 不同溫度差修正係數
$f_1 = \triangle T/15$
$\triangle$T: 進口空氣溫度與冷凝溫度溫度差
f_2 : 表 2 不同冷媒修正係數

如果安裝在海拔高於 500 公尺以上的場所時，請與我們聯繫。
我們也提供防蝕處理的盤管(衛能防蝕技術®)，如果選購衛能防蝕處理，則能力必須要再乘上 0.975。

Table 1 Catalog capacity conditions
表 1 型錄性能條件

Item 項目	Condition 條件
Refrigerant 冷媒	R404A
Temperature Difference 溫度差	15 °C

Table 2 Correction factor f for different refrigerants
表 2 不同冷媒修正係數 f_2 值

Factor 係數	R404A/R507	R134a
f_2	1	0.93

Fan Set Performance

風車性能

Our fan set is designed for free outlet not for ducting purpose. If you have requirement for install air duct at the air outlet of condenser, please contact with us for special design.
We also provide optional inverter for condensing temperature control.

我們的風車設計是直接排出熱交換器，所有的表列風車能力是依據出口端無障礙物時所獲得，並不是為安裝風管所設計。如果您要於風車出口安裝風管，請與我們聯絡。
我們亦有選購變頻器，可以進行冷凝溫度控制。

Table 3 Performance table of fan set (for one set)

表 3 風車組性能表(單組)

Hz 頻率	Fan Set Model 風車型號	Fan dia. 葉徑 mm	Input 入力 W	Voltage 電壓 V	Rating Current 額定電流 A
50Hz	6602JK	500	213	3ϕ230V	1.18
			213	3ϕ380V	0.71
	6602MB	560	291	3ϕ230V	1.42
			291	3ϕ380V	0.86
	6602NF	630	508	3ϕ230V	2.58
			508	3ϕ380V	1.56
	6602PK	710	1050	3ϕ230V	3.63
			1050	3ϕ380V	2.20
	6602RA2	805	1077	3ϕ230V	5.08
			1077	3ϕ380V	3.07

Line for Motor in Different Voltage

馬達電壓接線圖

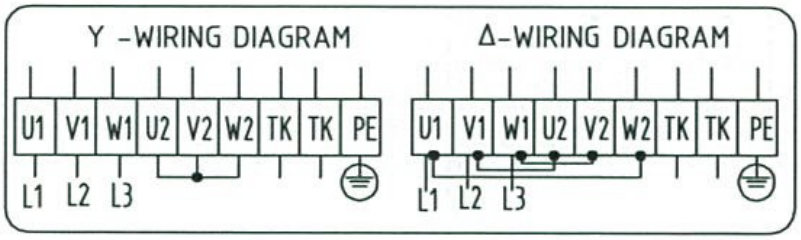

3φ400V 3φ230V

TK: Overload Thermal Protector (Inside motor)
PE: Ground
U1, V1, W1: Power Source

TK: 過載溫度保護開關（位於馬達內部）
PE: 接地線
U1, V1, W1: 電源

Dimension of Fan set

風車組尺寸

6602JK

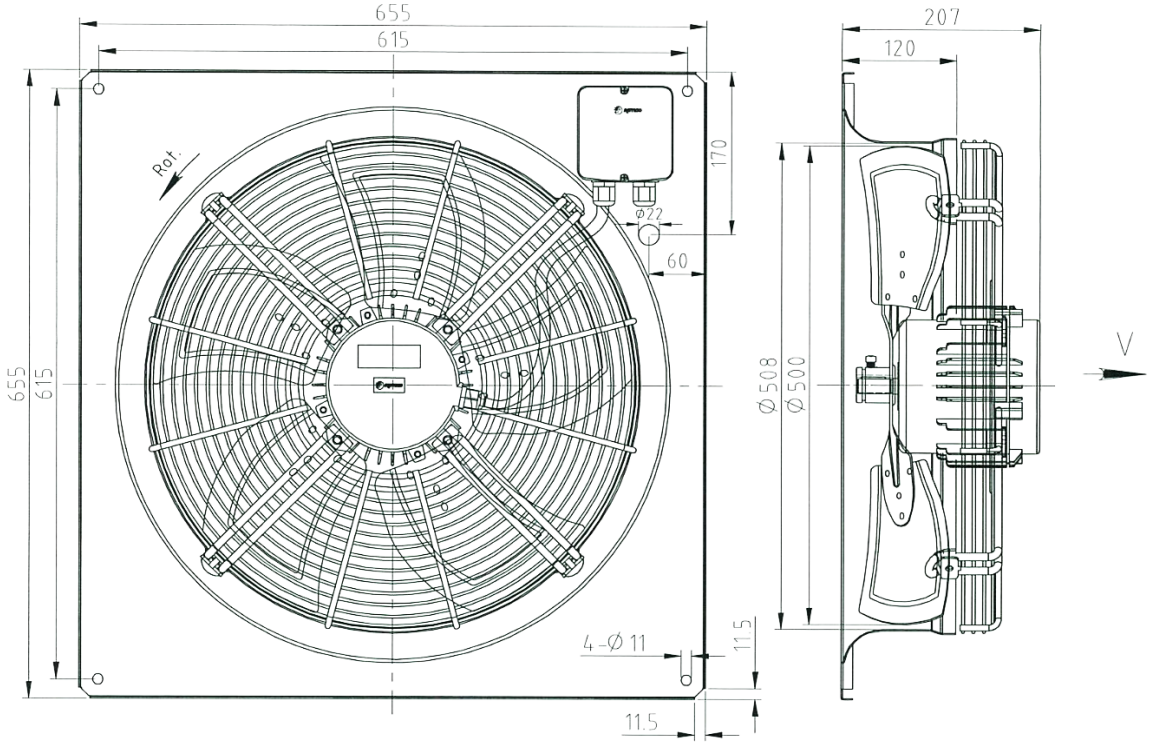

6602MB

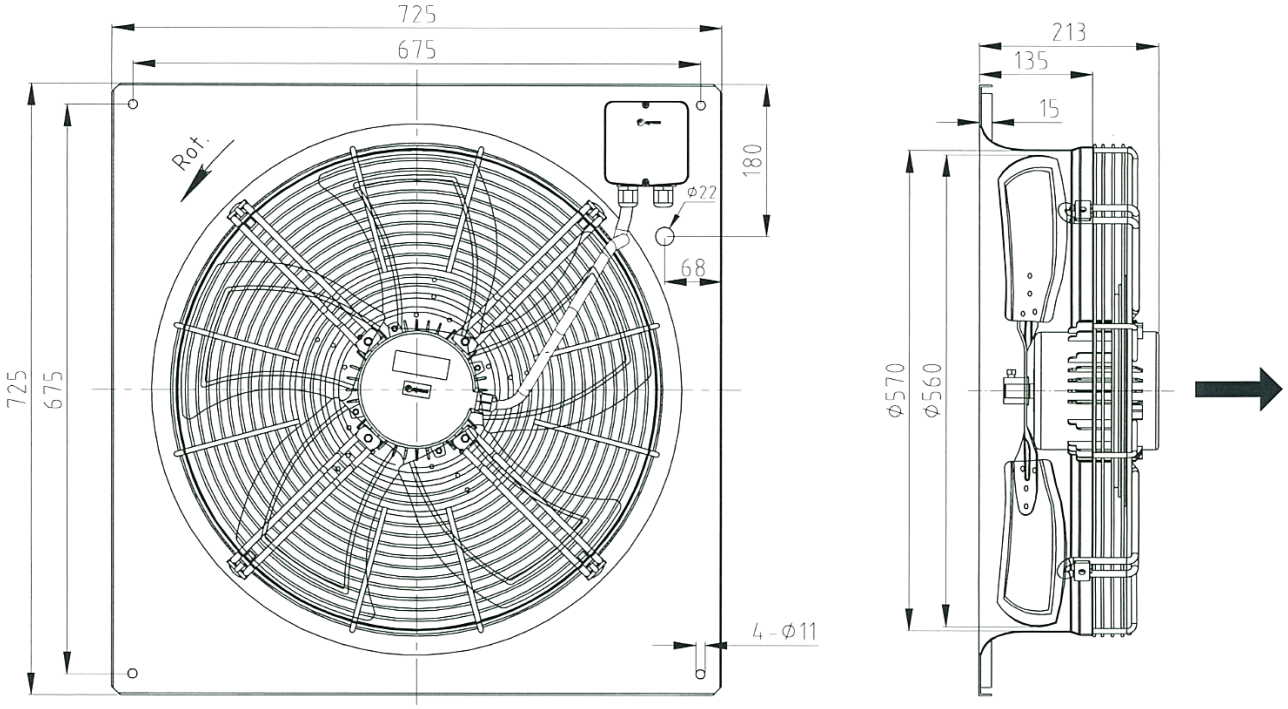

6602JK

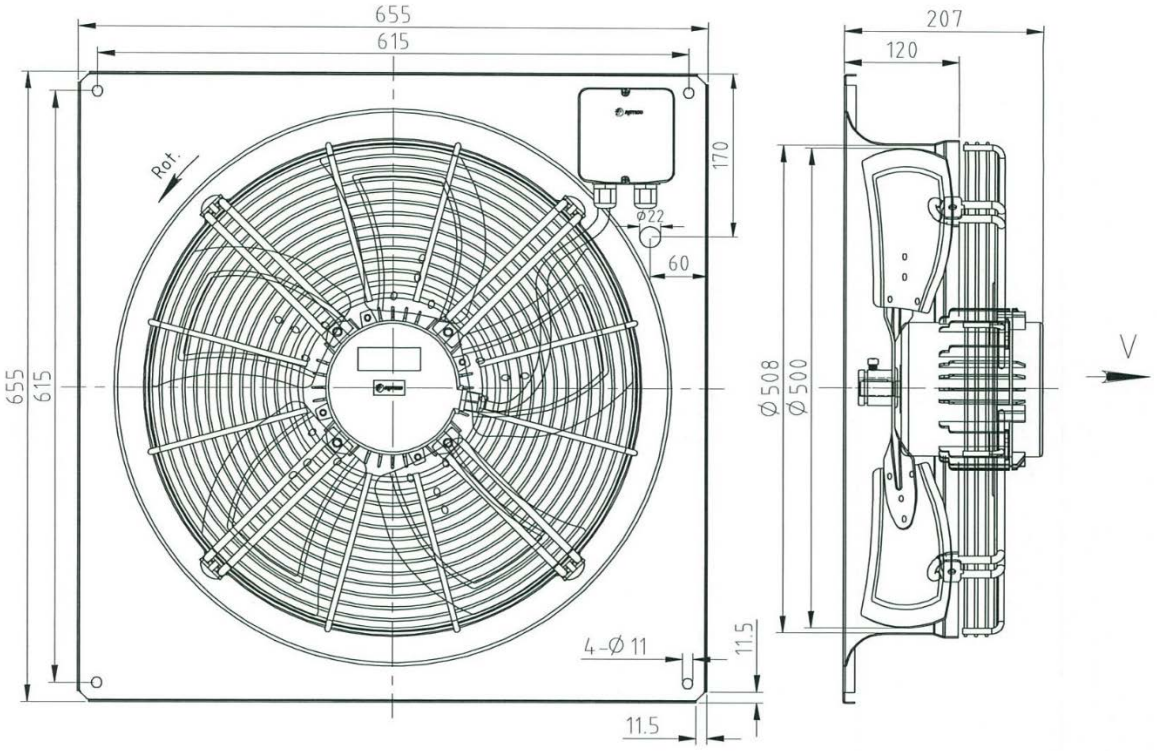

6602PK

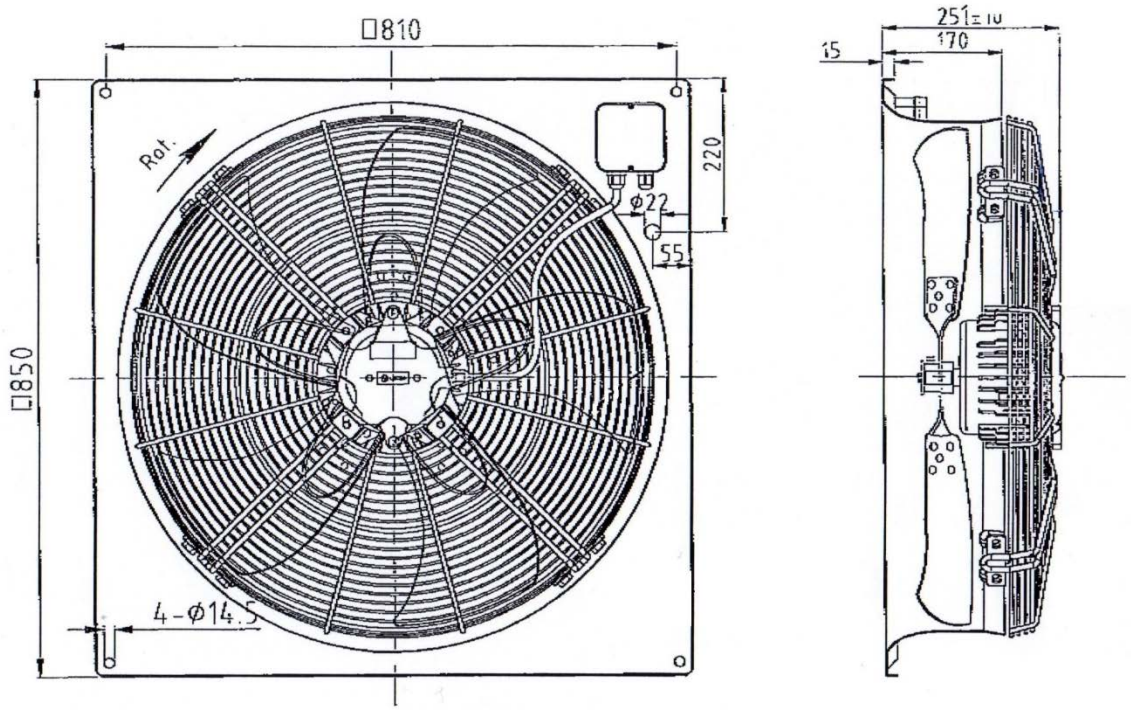

VBM/HM condenser

6602RA2

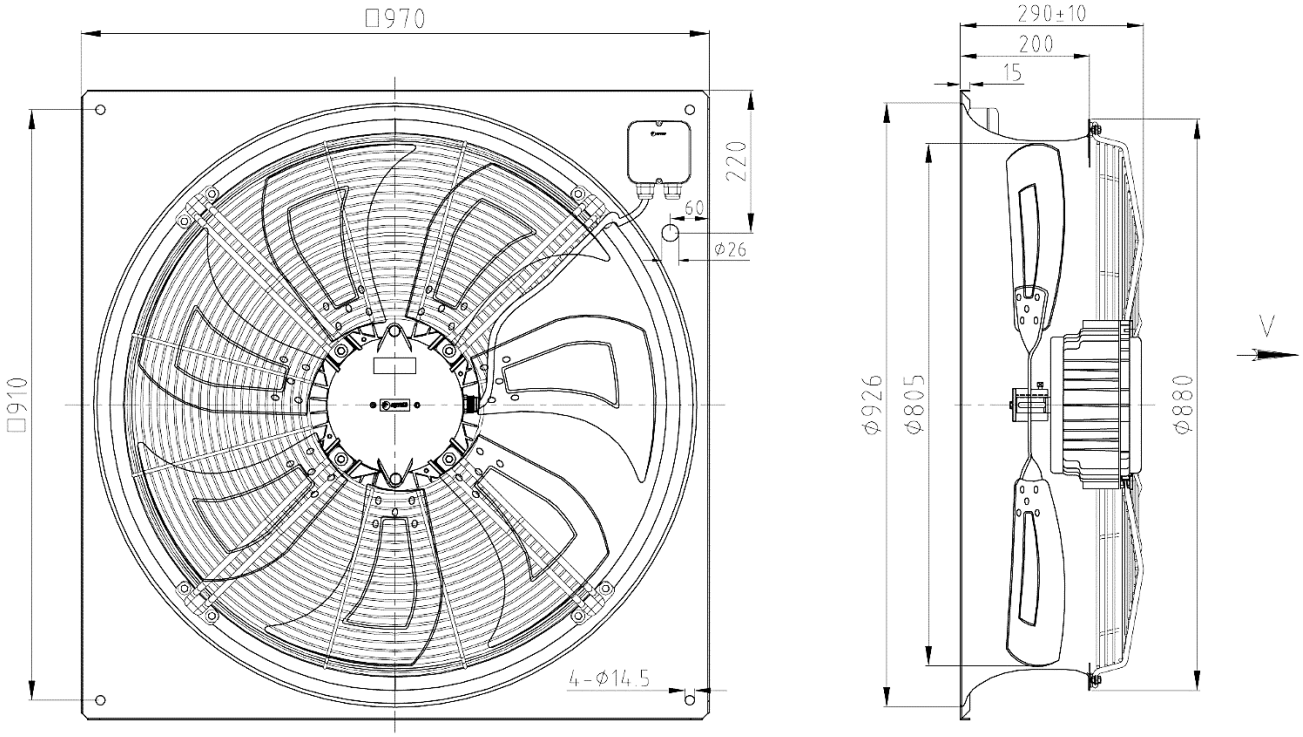

Parts Specification of our coil

熱交換器部品規格

Parts 部品	Specification 規格
Fins 鰭片	Aluminum Alloy 8006 鋁合金 8006
Tubes 管	Copper C1220T 3/8”(VBM) ,1/2”(VHM) 紫銅管 C1220T 3/8”(VBM),1/2”(VHM)
Casing 箱體	Painted Galvanized Steel G3302 SG-CC 烤漆鍍鋅鋼板 G3302 SG-CC Stainless Steel SUS304(Optional) 不銹鋼板 SUS304（選購）
Fan motor 風車馬達	IP 55
Anti Corrosion(Optional) 鰭片防蝕（選購）	EnergyGuard® 衛能防蝕技術

Version 2017.0.1 Subject to change without notice! 資料變更恕不另行通知！

I-Cherng Refrigeration Industrial Co., Ltd.
一丞冷凍工業股份有限公司
Heat Exchanger Taiwan 熱交換器 台灣製造
No.12 Chu Kuang 1st St., Daliao Dist.,
Kaohsiung City, 83164, Taiwan
台灣高雄市大寮區莒光一街 12 號
Tel:07-7873666 Fax:07-7872999
Website: www.icherng.com.tw
Email: icherng.com@msa.hinet.net

Heat Exchanger Taiwan

一丞